FIRST ANGLE PROJECTION (ALL DIMENSIONS IN MILLIMETRES)

DRAWING NO. 2-80-655-15985

05-228/C

CAUTION THE INFORMATION ON THIS DOCUMENT IS THE PROPERTY OF BHARAT HEAVY ELECTRICALS LTD. IT MUST NOT BE USED DIRECTLY OR INDIRECTLY IN ANY WAY DETRIMENTAL TO THE INTEREST OF THE COMPANY.

NOTES: ALL DIMENSIONS ARE IN MILLIMETRES

1. DESIGN PRESSURE – 0.2 KG/CM2 (G) DESIGN TEMPERATURE: 450°C
2. FOR STANDARD NOTES OF PRODUCTION AND ERECTION OF PIPES AND TOLERANCE ON FITTINGS REFER DRG NO. 4-80-001-37654 & 4-80-301-26192
3. FOLLOW APPLICABLE QP AND PAINTING SCHEDULE FOR THE PROJECT
4. ALL UNMARKED BENDS/ELBOWS ARE 90 DEG
5. PIPE ENDS SHALL BE BEVELLED AS PER B16.25 FIG.2 TYPE-A
6. GASKET IS SUPPLIED VIDE 7419-80-733 PGMA.
7. FOR ELECTRODE DATA REFER

PIPE SIZE	MATERIAL SPEC	EP FIG	WELD SPEC	ELECTRODE DATA	
				ROOT RUN	FILLER RUN
OD1020x8	ASTMA516 GR.70	FIG-A	8 V	ER70S-2/ E6010/E6013	ER70S-2/ E7016/E7018

8. THREADS SHALL BE UNIFIED(UNC FOR UPTO 1" DIA) AS PER ASME B1.1 WITH CLASS 2A FIT FOR STUDS AND CLASS 2B FIT FOR NUTS.
9. 01 ⌀ INDICATES WELD AT SHOP.
10. 01 ⌀ INDICATES WELD AT SITE.

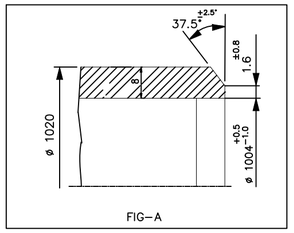

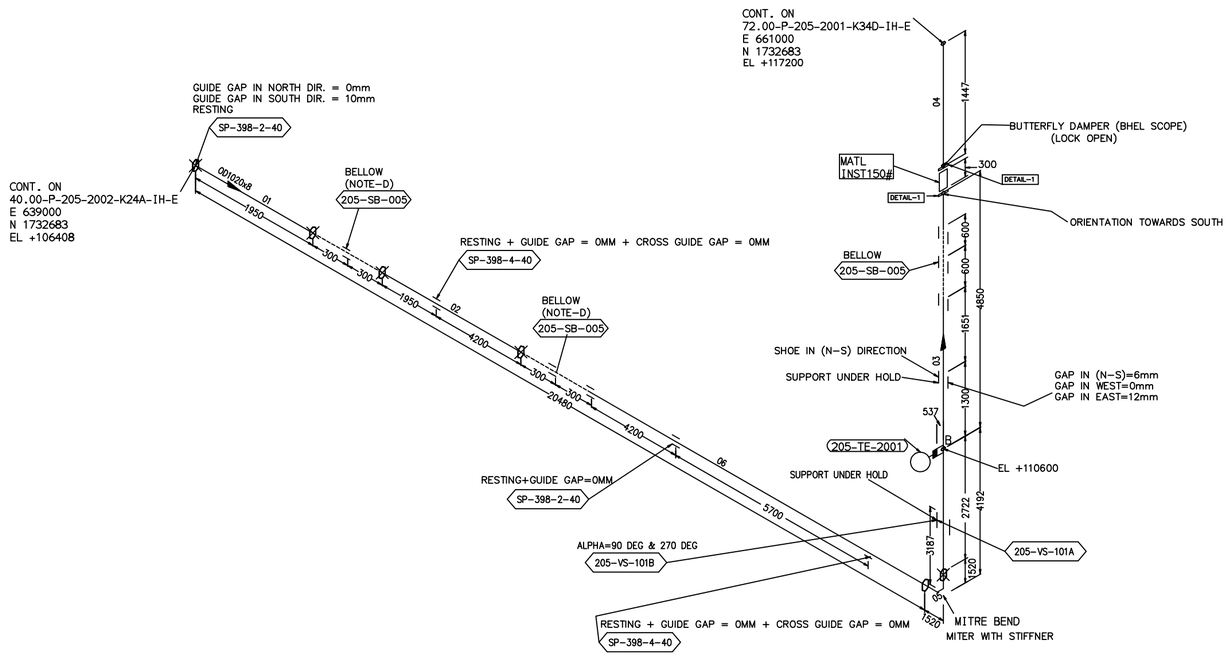

ITEM CODE	ITEM NO.	DESCRIPTION	DRAWING NO.	ITEM NO. / VAR	MATERIAL CODE / MATERIAL SPEC.	A / C	UNIT WT. / QTY.
	13	PLUG B16.11 3000# SCRM 1"					
---	12	HALF COUPLING 1" B16.11 CL:6000	4-80-655-83149		---- / SA 105		0.570 / 1
GKFDR22Z03202ZZZZ	11	GASKET JOB STD EXPANDED PTFE CORD 150# 7MM THK – 40"	2-80-655-15985		---- / ----		--.-- / 2
---	10	NUT 5/8" UNC	2-80-655-15985		---- / A194 GR.2H		0.033 / 128
---	09	STUD 5/8" UNC L=113MM	2-80-655-15985		---- / A193 GR.B7		0.224 / 64
FNF6321Z032ZZZZZZ	08	FLANGE.SO CL.150 FF/125AARH 40"	2-80-655-16008	08	---- / ASTM A 516 GR.70	C	38.306 / 2
WK602D3Z006ZZZZZZ	07	PIPE OD33.4X4.55 L=500	~~2-80-655-15985~~		---- / ~~ASTM A 106 GR.B~~	C	3.240 / 1
P18Y613Z03263ZZZZ	06	P.F PIPE OD1020X8 L=11180	3-80-655-35455	20	---- / ASTM A 516 GR.70		2232.691 / 1
WDMBY41Z0326305ZZ	05	P.F MITRE BEND OD1020X8	2-80-655-16010	07	---- / ASTM A 516 GR.70		487.616 / 1
P18Y613Z03263ZZZZ	04	P.F PIPE OD1020X8 L=1447	3-80-655-35455	04	---- / ASTM A 516 GR.70	C	288.972 / 1
P18Y613Z03263ZZZZ	03	P.F PIPE OD1020X8 L=7572	3-80-655-35455	03	---- / ASTM A 516 GR.70	C	1512.159 / 1
P18Y613Z03263ZZZZ	02	P.F PIPE OD1020X8 L=6150	3-80-655-35455	02	---- / ASTM A 516 GR.70	C	1228.180 / 1
P18Y613Z03263ZZZZ	01	P.F PIPE OD1020X8 L=1950	3-80-655-35455	01	---- / ASTM A 516 GR.70	C	389.423 / 1

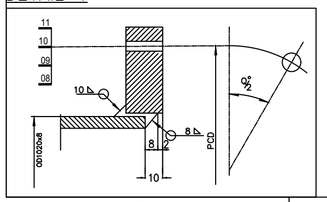

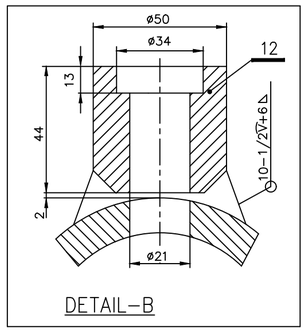

REV	DATE	ALTERED / APPROVED	
02	13.05.19	ALTERED	E.PYRIA
		APPROVED	KVR
ZONE	DRAWING REVISED AS PER LATEST EIL DRAWING. REVISION MARKED AS 02		
01	29.04.19	ALTERED	M.P.K
		APPROVED	TRINADH
ZONE	DRAWING REVISED AS PER MAIL FROM EIL DT: 24.04.19 REVISION MARKED AS 01		

CUSTOMER: INDIAN OIL CORPORATION LIMITED (HALDIA)

CONSULTANT: ENGINEERS INDIA LIMITED (EIL) NEW DELHI

BHEL CUSTOMER NO: 7419

NAME OF PROJECT: BS-VI, HALDIA

BHARAT HEAVY ELECTRICALS LTD., PIPING CENTRE, CHENNAI 600 017

	NAME	SIGN	DATE	NO OF ITEMS
DRN	E.PYRIA	–sd–	27.02.19	
CHD	SARAVANAN.C	–sd–	27.02.19	
APPD	KVR	–sd–	27.02.19	

DEPT. / CODE	GRADE OF UN TOL. DIM	SCALE	WEIGHT (Kg).	ITEM No.
	C/M/F			

TITLE: EIL DRAWING NO: 40-P-205-2003-K24A-IH-E

CARD CODE: U 01

DRAWING No. 2-80-655-15985

REV 02

N

SIZE A2

V: A2